3 Pole bulb and capillary thermostats

Enclosure	Type	Operation	Contact	Measurement	Ranges °C	Models
IP65, IK10	Control	Mechanical	3PNC	Remote	+400°C / -35°C	Y1I8C & Y1R8C
Material						
Aluminum						

Y1I8C: External adjustment

Y1R8C: Internal adjustment

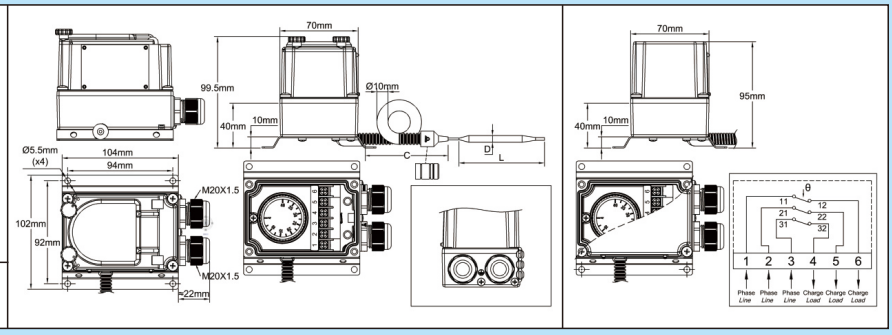

Applications

Remote control in usual industrial application and environment, not hazardous areas, when it is requested to control a 3 phases heating circuit.
Internal adjustment is convenient for products that must not be frequently adjusted.

Housing: Aluminum, IP65, IK10. Mounted on a SUS304 stainless steel wall mounting plate which keeps temperature sensing element away from the wall. Grey RAL7032 epoxy painting. Stainless steel captive cover screws. Captive aluminum lid.
Set point adjustment ranges: -35+35°C (-30+95°F); -10+40°C (15-105°F); 4-40°C (40-105°F); 0-60°C (32-140°F); 0-90°C (32-195°F); 30-90°C (85-195°F); 30-110°C (85-230°F); 50-200°C (120-390°F); 50-300°C (120-570°F); 100-400°C (210-750°F).
Set point adjustment: By °C printed knob. All types have an adjustable rotation limit system located inside the knob that allows reducing the set point adjustment span.Types with external adjustment have a transparent window. This device allows seeing the pilot light and the knob position. °F values are available in option
Action: Temperature control.
Sensing element: Liquid expansion bulb and capillary. The capillary is protected by a stainless steel corrugated pipe terminated by a silicone tip. A plastic cap plug provided as standard accessory allows locking the flexible metal conduit inside a pocket (See pockets in the accessories section).
Electrical connections: Inside, on screw terminal connection block
Earthing: External screw terminal.
Cable input and output: Two M20 cable gland, Black PA66.
Mounting: Wall mounting, by 4 holes for screws dia. 4 to 5 mm, 94 x 92 mm distance
Identification: Metallic identification label, riveted.
Contact: 3PST, open on temperature rise
Electrical rating, resistive loads:
16A 250V, 50 ~60Hz: >100000 cycles,
20A 250V, 50 ~60Hz: ≥ 50000 cycles,
10A 400V, 50 ~60Hz: ≥ 50000 cycles.
Minimum Storage temperature: -35°C (-30°F)
Maximum ambient temperature: 60°C (140°F)
For more technical information ask 8C thermostat technical data sheet.

Main references

Temperature range °C (°F)	Reference with external adjustment	Reference with internal adjustment	Capillary length (C, mm)	Bulb diameter (D, mm)	Bulb length (L, mm)	Differential°C (°F)	Max temperature on bulb °C (°F)
-35+35°C (-30+95°F)	Y1I8C5035AO6000J	Y1G8C5035AO6000J	1500	6	120±5	1,6±1°C (2,9±2°F)	60°C (140°F)
-10+40°C (15-105°F)	Y1I8C0040AO6000J	Y1G8C0040AO6000J	1500	6	107±5	1,5±1°C (2,7±2°F)	70°C (158°F)
4-40°C (40-105°F)	Y1I8C4040AO6000J	Y1G8C4040AO6000J	1500	6	120±5	1±0.5°C (1,8±1°F)	70°C (158°F)
0-60°C (32-140°F)	Y1I8C0060AO6000J	Y1G8C0060AO6000J	1500	6	86±5	2.5±1°C (4,5±1,8°F	80°C (176°F)
0-90°C (32-195°F)	Y1I8C0090AO6000J	Y1G8C0090AO6000J	1500	6	98±5	2.5±1°C (4,5±1,8°F)	120°C (250°F)
30-90°C (85-195°F)	Y1I8C3090AO6000J	Y1G8C3090AO6000J	1500	6	98±5	2.5±1°C (4,5±1,8°F)	120°C (250°F)
30-110°C (85-230°F)	Y1I8C3110AO6000J	Y1G8C3110AO6000J	1500	6	86±5	2.5±1°C (4,5±1,8°F)	140°C (284°F)
50-200°C (120-390°F)	Y1I8C5200AO6000J	Y1G8C5200AO6000J	1500	6	65±5	4±2°C (7±3.6°F)	230°C (446°F)
50-300°C (120-570°F)	Y1I8C5300AO3000J	Y1G8C5300AO3000J	1500	3	145±5	10°C±2°C (18±3.6°F)	330°C (626°F)
100-400°C (210-750°F)	Y1I8CA400AO3000J	Y1G8CA400AO3000J	1500	3	93±5	10°C±2°C (18±3.6°F)	430°C (800°F)

°F printing: replace last character (J) by K

Knob printings

°C Printing				
-35+35°C	-10+40°C	4-40°C	0-60°C	0-90°C
30-90°C	30-110°C	50-200°C	50-300°C	100-400°C

°F Printing				
-30+95°F	15-105°F	40-105°F	30-140°F	30-195°F
85-195°F	85-230°F	120-390°F	120-570°F	210-750°F

Because of permanent improvement of our products, drawings, descriptions, features used on these data sheets are for guidance only and can be modified without prior advice